STORAGE DEVELOPER CONFERENCE

SDC 21

BY Developers FOR Developers

Virtual Conference
September 28-29, 2021

What's New in SFF?

Another Conversation with Very Opinionated Experts

Presented by the SFF TA TWG

SNIA's SFF TA TWG

- 75+ member companies
- 170+ publicly available active specifications, information documents, and reference guides (available here) covering a wide range of topics:
  - Cables & connectors
  - Form factor sizes and housing dimensions
  - Management interfaces
  - Transceiver interfaces
  - Electrical interfaces
- Enables technology vendors to procure compatible, multi-sourced products and solutions
- Consider becoming a member today!

Overview

- SFF Project Update
- EDSFF
- EDSFF Thermal Testing
- QSFP56
- Next generation QSFP

- Moderated by John Geldman

Very Opinionated Experts

Connector & Cable Gal: Alex Haser, Molex

EDSFF Guy: Anthony Constantine, Intel

Thermal Guys: Bill Lynn, Dell Technologies & Dan Field, Dell Technologies

QSFP56 Guy: Tom Palkert, Samtec

Moderator: John Geldman, Kioxia

Anthony Constantine

Principal Engineer, Intel

Anthony Constantine is a Principal Engineer at Intel, where he focuses primarily on driving innovation to memory and storage from mobile to datacenter. He is active in the standards area, contributing to SFF-TA (SNIA), Open NAND Flash Interface (ONFI), PCI-SIG, and JEDEC. Anthony has over 21 years of experience in the technology industry with an expertise in memory, physical interfaces, low power technologies, and form factors. He earned a BS in Electrical Engineering from UC Davis.

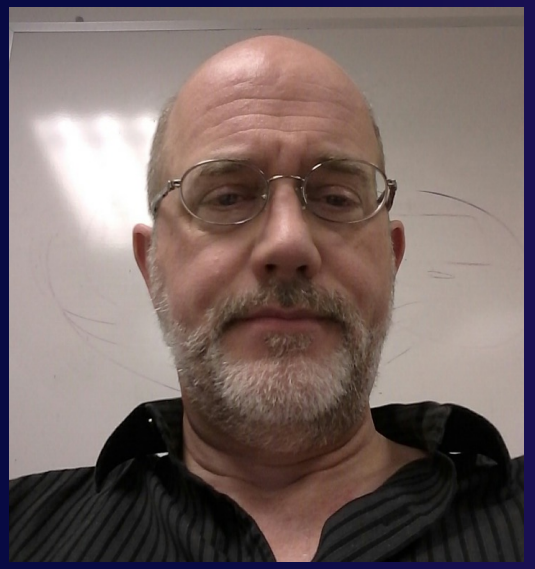

Dan Field

Thermal Engineer, Dell Technologies

Dan Field is a Thermal Engineer with Dell Technologies. He has a 37-year electronics career with Digital Equipment, Intel, EMC and Dell. His current focus is system thermal design and test with an emphasis on disk drive devices.

Alex Haser

Senior Industry Standards Engineer
Molex

Alexandra Haser is a Senior Industry Standards Engineer at Molex. After joining Molex in 2014, Alex worked as a Signal Integrity Engineer and continues to focus on the performance of high speed I/O and storage interconnects. She holds leadership positions in several industry standards groups including PCI-SIG, the SFF TA TWG, and the SCSI Trade Association. Alex earned her B.S. and M.S. degrees in Industrial and Enterprise Systems Engineering from University of Illinois, Urbana-Champaign.

Bill Lynn

Senior Distinguished Engineer – Server Architecture
Dell Technologies

Bill Lynn is a Distinguished Engineer in Dell's Server Architecture Pathfinding group. Bill has more than 30 years' experience architecting and developing storage subsystems. Bill was the original author of the SFF-8639 U.2 connector specification and is one of the current editors of the SFF-TA-1008 EDSFF E3 device specification. Bill is also Dell's representative to the NVMe Board of Directors.

Tom Palkert

System Engineer

Samtec & MACOM

Thomas Palkert has done architecture/definition and design of high speed SERDES and optical modules for data center, telecom, storage, military and consumer products. He has been involved in many standardization efforts including Ethernet, Fibre channel, Infiniband, VESA, SFF and the Optical Internetworking Forum. His current work focuses on high speed electrical and optical interfaces for 100G to 1.6Tbit applications. Tom is a past member of the OIF board of directors, past chair of the OIDA silicon photonics alliance and is currently chair of the Fibre Channel T11.2 Physical Layer Task Group, vice chair of the OIF Physical and Link Layer (PLL) working group and chair of the SNIA TA TWGG Transceivers Workgroup.

John Geldman
Director, SSD Industry Standards at KIOXIA

- Member Board of Directors, NVM Express
- Currently an active contributor to the following standards organizations:
  - NVM Express, INCITS T10, INCITS T13, JEDEC, OCP, PCI-SIG, SATA IO, SNIA, IEEE SISWG
  - In addition, John's team members are also active in CXL, DMTF, TCG
- Corporate leadership responsibility for standards for multi-billion dollar storage vendors since 2011
- Involved in storage standards since 1992, with an early introduction to standards including the transition from X3T9 to ATA, SCSI, PCMCIA, and CardBus
- An active FMS CAB member for at least 10 years

SFF Project Update

Presented by Alex Haser

What Has SFF Done in the Last Year?

- SFF documents and project status can be found on the SFF public page

Date	ID	Title	Published	Draft	Status
2021-09-23	SFF-TA-1026	Storage System High Speed Cable Interconnect	-	0.0.3	Draft
2021-09-20	SFF-TA-1005	Universal Backplane Management (UBM)	1.3	1.3.2	Draft
2021-08-23	SFF-TA-1023	Thermal Characterization Specification for EDSFF Devices	-	0.8.6a	Draft
2021-08-06	SFF-TA-1006	Enterprise and Datacenter 1U Short SSD Form Factor (E1.S)	1.5	-	Published
2021-07-19	SFF-TA-1025	QSFP56 Electrical (Project may be withdrawn)	-	-	New Project Initiated
2021-07-19	SFF-TA-1028	QSFP112 Electrical (Project may be withdrawn)	-	-	New Project Initiated
2021-07-19	SFF-TA-1029	Cabled QSFP Cage & Connector	-	-	New Project Initiated
2021-07-09	SFF-TA-1007	Enterprise and Datacenter 1U Long SSD Form Factor (E1.L)	1.2	-	Published
2021-07-07	GOV-TA-0009	SFF TA TWG Policies & Procedures	2.0	-	Published
2021-07-07	GOV-TA-0001	SFF TA TWG Process Guide	2.0	-	Published
2021-06-25	SFF-TA-1030	Next Gen QSFP Mechanical	-	-	Expired
2021-06-14	SFF-TA-1027	Next Gen QSFP Connector, Cage, & Module	-	-	New Project Initiated
2021-06-02	SFF-TA-1016	Internal Unshielded High Speed Connector System	1.0	-	Published
2021-05-24	SFF-8024	SFF Module Management Reference Code Tables	4.9	-	Published
2021-05-06	SFF-TA-1020	Cables and Connector Variants Based on SFF-TA-1002	1.0	1.0.1	Draft
2021-03-31	SFF-8472	Management Interface for SFP+	12.4	-	Published
2021-02-05	SFF-TA-1009	Enterprise and Datacenter Standard Pin and Signal Specification (EDSFF)	3.0	-	Published
2021-01-22	GOV-TA-0007	INF Cover Page	-	-	Draft
2021-01-22	GOV-TA-0008	New Project Guidelines	1.0	-	Published
2021-01-18	SFF-8614	Mini Multilane 4/8X Shielded Cage/Connector (HDsh)	3.4	3.4.4	Draft
2021-01-18	SFF-8613	Mini Multilane 4/8X Unshielded Connector (HDun)	3.5	3.5.4	Draft
2021-01-15	SFF-TA-1024	SFF-TA-1016 Test Specification	-	0.0.1	Draft
2020-11-06	SFF-TA-1008	Enterprise and Datacenter SSD Form Factor (E3)	2.0	-	Published

SFF Project Update: Behind-the-Scenes Projects

- Keyword Project
  - SFF document names aren't always intuitive (e.g., SFF-8614 doesn't say "MiniSAS HD" anywhere in the title)
  - SFF Editors are adding keywords to documents to make them more easily findable
  - A searchable Editor field will also be added
- Other projects in the works:
  - Updates to Causeway member page
  - Updates to SFF IP Disclosure webpage

Useful SFF Documents

- SFF has several “decoder” documents that may be helpful
  - SFF-9402: Multi-Protocol Internal Cables for SAS and/or PCIe
    - Guide to pinouts for multiprotocol and/or reversible cable solutions
  - SFF-9639: Multifunction 6X Unshielded Connector Pinouts
    - Guide to the pinout usage of the SFF-8639 six-lane, high speed connector that supports both SAS and PCIe
  - REF-TA-1011: Cross Reference to Select SFF Connectors and Modules
    - Reference to the naming conventions for various configurations of pluggable I/O solutions

SFF Project Updates

- Completed Projects:
  - SFF-TA-1016: Internal Unshielded High Speed Connector System
  - SFF-8024: SFF Module Management Reference Code Tables
  - SFF-8472: Management Interface for SFP+

- New Projects:
  - SFF-TA-1026: Storage System High Speed Cable Interconnect
  - SFF-TA-1027: Next Gen QSFP Connector, Cage, & Module (More info on this later)
  - SFF-TA-1029: Cabled QSFP Cage & Connector

SFF Project Updates

- WIP Projects:
  - SFF-TA-1024: SFF-TA-1016 Test Specification
  - SFF-TA-1005: Universal Backplane Management (UBM)
  - MiniSAS HD: Adding SMT footprint variations to enable higher data rates
    - SFF-8613: Mini Multilane 4/8X Undhielded Cage/ Connector (HDun)
    - SFF-8614: Mini Multilane 4/8X Shielded Cage/ Connector (HDsh)
  - QSFP56: Tom will present more information on this topic later
    - SFF-8665: QSFP+ 28 Gb/s 4X Pluggable Transceiver Solution (QSFP28)
    - SFF-8679: QSFP+ 4X Hardware and Electrical Specification

SFF Project Updates: SFF-TA-1002 Family

- Documents:
  - SFF-TA-1002: Protocol Agnostic Multi-Lane High Speed Connector
  - SFF-TA-1017: Vertical SFF-TA-1002 Connector SI Test Board Specification
  - SFF-TA-1018: Right Angle SFF-TA-1002 Connector SI Test Board Specification
  - SFF-TA-1019: Straddle Mount SFF-TA-1002 Connector SI Test Board Specification
  - SFF-TA-1020: Cables and Connector Variants Based on SFF-TA-1002 [WIP]
  - REF-TA-1012: Pin Assignment Reference for SFF-TA-1002 Connectors
- Updates/ Highlights:
  - Defines Vertical, Right Angle, and Straddle Mount variations of 1C, 2C, 4C, and 4C+ connectors
  - Documentation also includes cable description, SI test board specifications, & pinout information

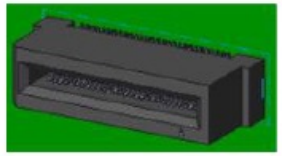

1C Connector

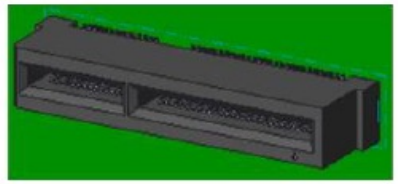

2C Connector

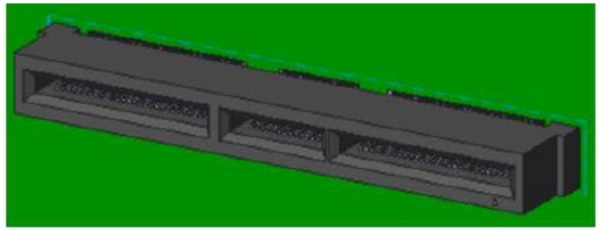

4C Connector

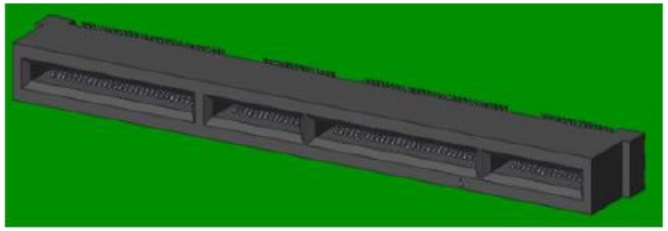

4C+ Connector

SFF Project Updates: EDSFF

- Documents:
  - SFF-TA-1006: Enterprise and Datacenter 1U Short SSD Form Factor (E1.S)
  - SFF-TA-1007: Enterprise and Datacenter 1U Long SSD Form Factor (E1.L)
  - SFF-TA-1008: Enterprise and Datacenter SSD Form Factor (E3)
  - SFF-TA-1009: Enterprise and Datacenter Standard Pin and Signal Specification (EDSFF)
  - SFF-TA-1023: Thermal Characterization Specification for EDSFF Devices
- Anthony and Bill will present more information on EDSFF

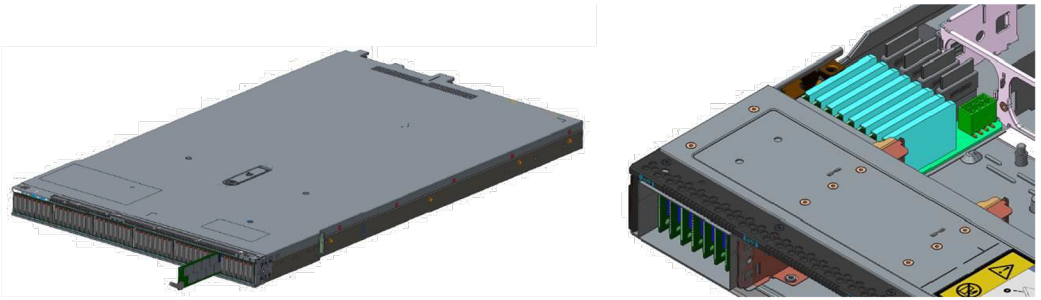

Example E1.S implementation

Example E1.L implementation

EDSFF

Presented by Anthony Constantine

What We Said Last Year vs. now for EDSFF

- The specs are always evolving
  - 4 updates, 1 new spec, 0 new sizes ☺
- The interoperable connector
- All the form factors have usages
  - This has not changed
- The Future Device Types
  - Accelerators, CXL, NICs

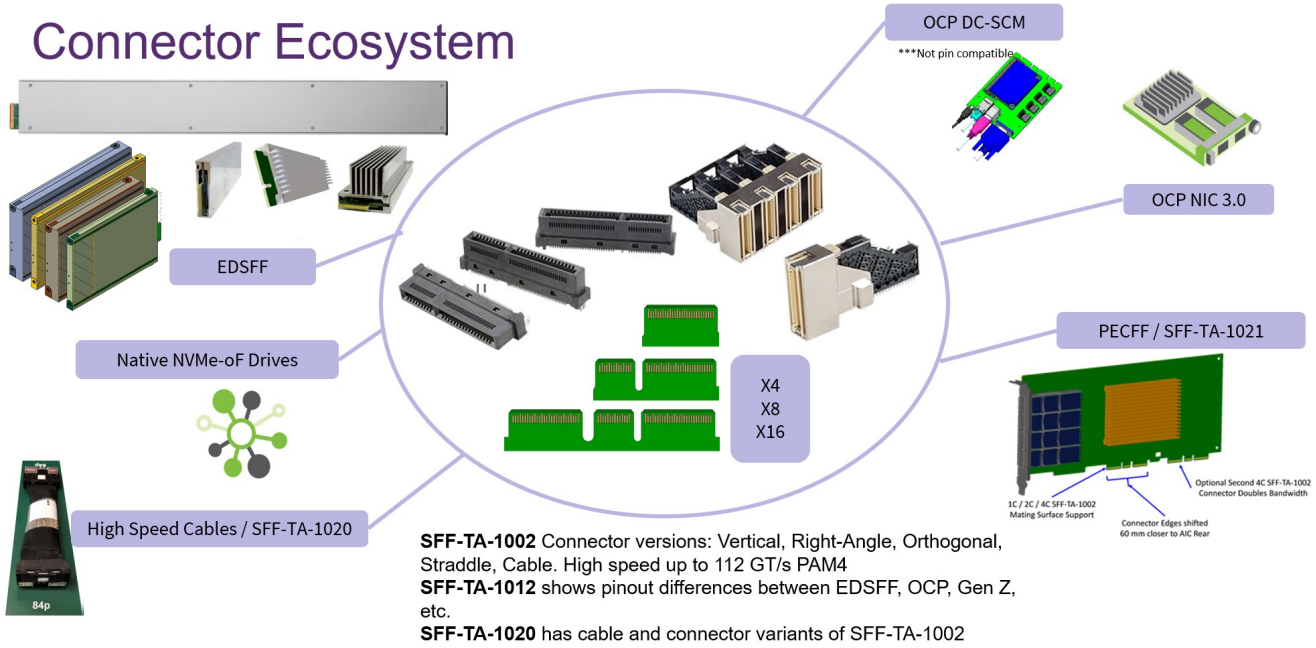

Recent EDSFF Spec Changes

SFF-TA-1009 Rev 3.0 (pin/signal spec)

- Electrical Requirements for 16 and 32 GT/s
- Lots of clarifications, cleanup, errata fixes

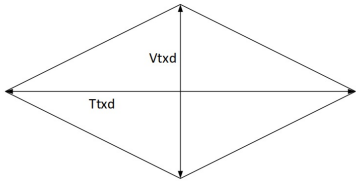

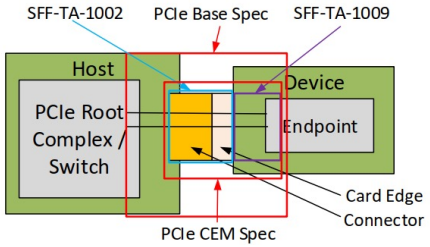

SFF-TA-1006 Rev 1.5 (E1.S Spec)

- Power/thermals update, general cleanup

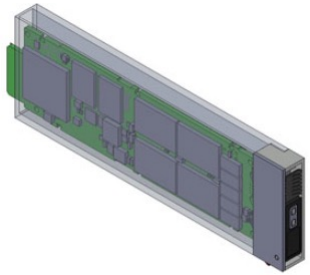

SFF-TA-1007 Rev 1.2 (E1.L Spec)

- Power/thermals update, general cleanup

SFF-TA-1008 Rev 2.0 (E3 form factor)

- Length, connector position change
- Connector aligned to OCP NIC 3.0

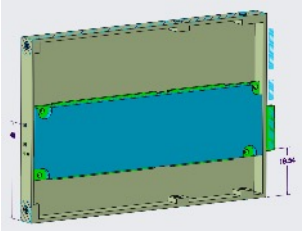

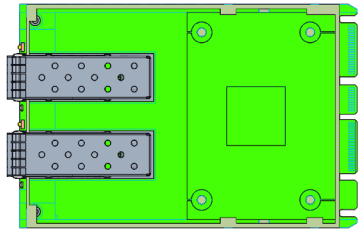

What is next?

SFF-TA-1023 (Thermal Characterization)

- Common method for device measurement and reporting of thermal performance

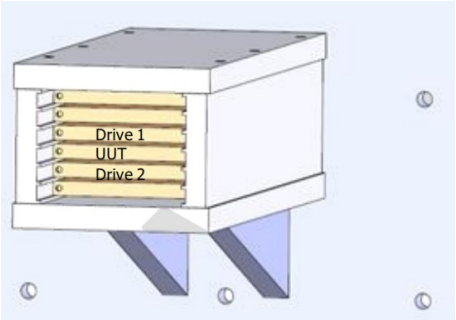

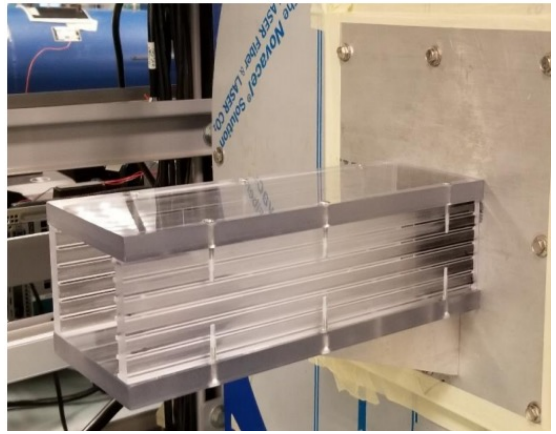

Possible future work (all speculative)

- >32 GTs electrical requirements
- CXL features (if needed)

Links to More Information:

- SFF Website: https://www.snia.org/sff
- Form Factors overview https://www.snia.org/forums/cmsi/knowledge/formfactors
- Other talks on EDSFF:
  - Go to https://www.snia.org/ and search for “EDSFF” in the SNIA Educational Library Section
  - Lots of content on YouTube as well.

SFF-TA-1023 Thermal Update

Presented by William Lynn

Overview - SFF-TA-1023

- The main components of the specification are
  - Test fixture definition and usage
  - Airflow Impedance Levels – define the pressure drop of the device under test
  - MaxTherm Levels – define minimum airflow requirement as a function of local inlet temperature
  - DTherm Levels – similar to MaxTherm but with the device in a reduced performance state
  - MaxAmbient – maximum approach ambient temperature supported by the device

- MaxTherm / DTherm / MaxAmbient are <u>determined by the vendors</u>, the spec will define the method the vendors will use for this.

Benefits and Advantages

- Provides information on the cooling needs for each drive
- Allows test and comparison of drives from different suppliers
- Provides power, IO BW, impedance, and cooling info to system designer
- Measures drive as standalone element. Removes carrier and external equipment effects.

Assumptions

- Airflow impedance of E3 thin devices is controlled via mechanical tolerance requirements
  - E3 Thin thickness is defined as 7.5mm +0.2/-0.5
- Fixture geometry uses 9.30mm for drive to drive spacing
  - 6-up for thin, 3-up for thick
- MaxTherm, Max Ambient determined by $T_{throttle}$ limit of drive
  - Device remains reliable at start of throttling
- Measurement in airflow is necessary to determine thermal behavior

Airflow and Impedance

- Establishes multiple thermal characteristics of a device
  - AFI Level: Flow Impedance Level – used to establish which airflow impedance curve works for a device at a given power state

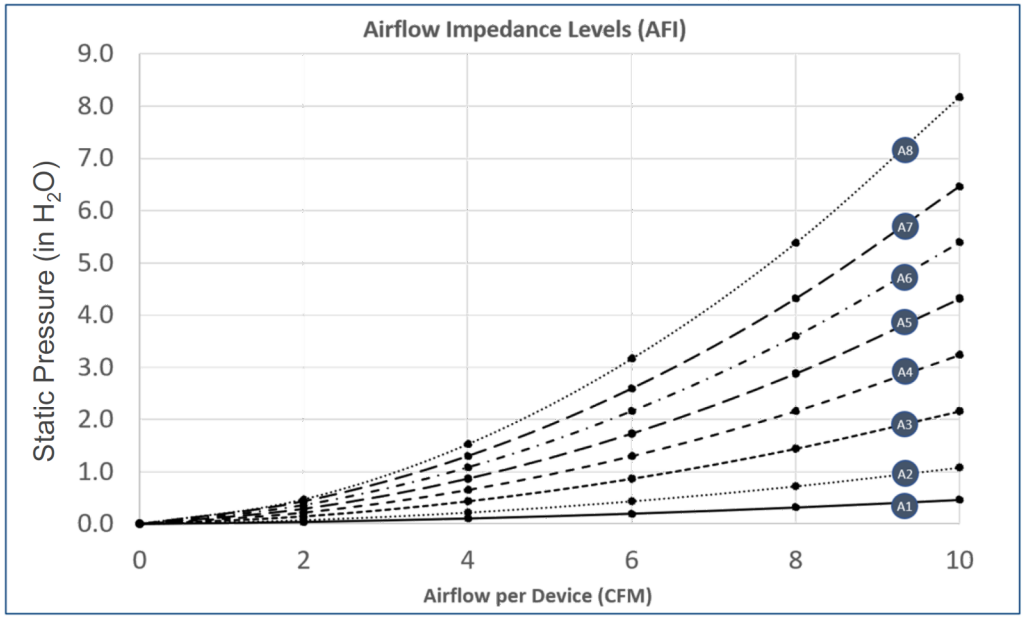

Figure 4-1: AFI Levels for EDSFF Devices

  - MaxTherm Level – Minimum airflow required at NVMe Power state 0 for the specified AFI level
  - Dtherm Level - Minimum airflow required at each characterized operational NVMe Power state for the specified AFI level
  - Approach Air Temperature - Average temperature of the air before it reaches the EDSFF devices

Test Fixture

- SFF-TA-1023 defines an airflow test fixture that is used to determine airflow impedance levels and MaxTherm/DTherm levels
- The EDSFF drive count is 6 thin, or 3 thick.
  - Two separate test fixtures, or a modular test fixture will be required to accommodate 6 thin or 3 thick at a 9.3mm pitch
- The proposed fixture uses bare devices (no carrier) and the devices would be secured on rails built into the fixture.
- The spec details internal wetted dimensions. Actual fixture design can vary.

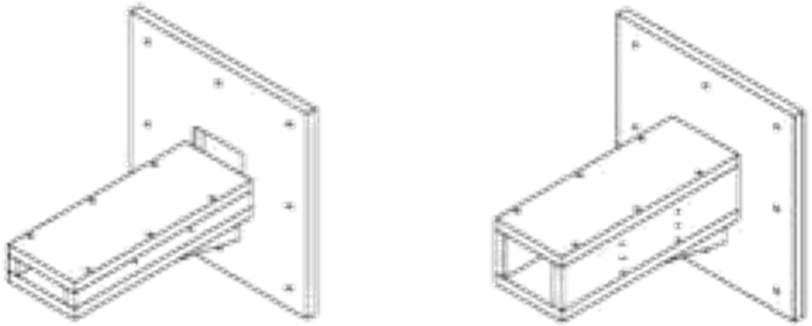

1 DRIVE 3 DRIVES

FULL ASSEMBLY FOR USE

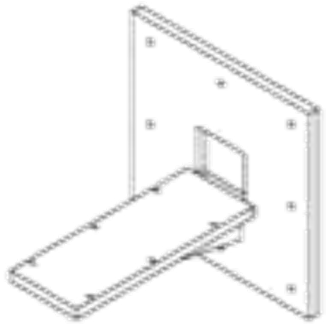

BASE UNIT ASSEMBLED FOR DELIVERY

QSFP56

Presented by Tom Palkert

QSFP56 Project Goals

- Update QSFP SFF documents to include changes required to support 56G PAM4 signaling
- Add Cabled Cage and Connector
- Incorporate updates from CMIS (Common Management Interface) and QSFP-DD

QSFP56 Document List

- Existing documents:
  - SFF-8665: QSFP 4X Pluggable Transceiver Solution ← Renaming
  - SFF-8679: QSFP+ 4X Hardware and Electrical Specification
  - SFF-8661: QSFP+ 4X Module

- New document:
  - SFF-TA-1029 (QSFP Cabled Cage and Connector)
- Incorporated by reference
  - CMIS (Common Management Interface)

Updates to SFF-8665: QSFP 4X Pluggable Transceiver Solution

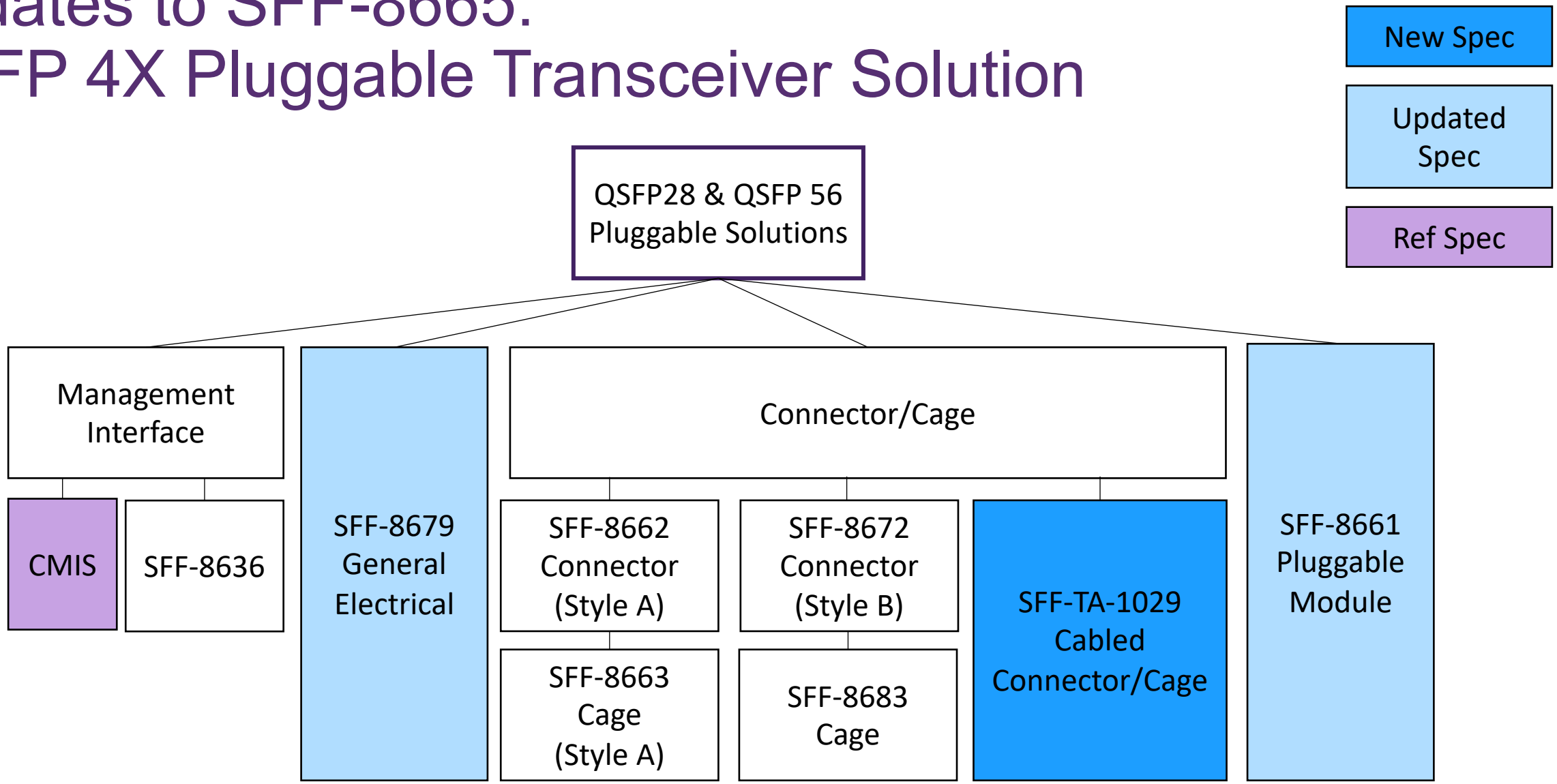

Updates to SFF-8679: QSFP Electrical

- Updates from QSFP-DD
  - Improved Thermals
    - High power module table
    - Surface roughness, flatness specs for high power modules
  - Updated power supply decoupling, ramp, noise sections
  - Add Type 2 and Type 2A module types to support higher power modules
- Updates to support CMIS
  - New timing for low-speed signals and management interface
  - New functional description for LPMode

SFF-TA-1029:
QSFP Cable Cage & Connector

Improved Signal Integrity

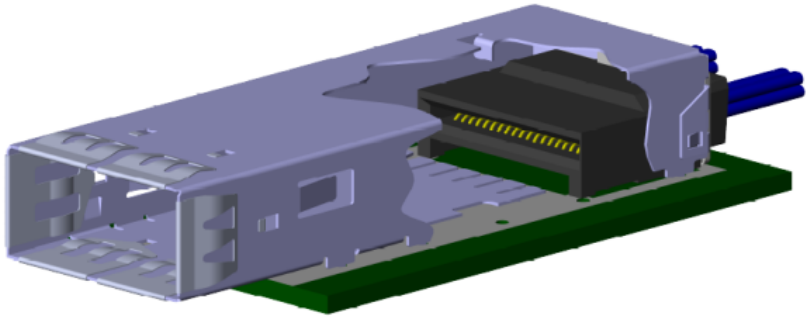

Improved Thermals

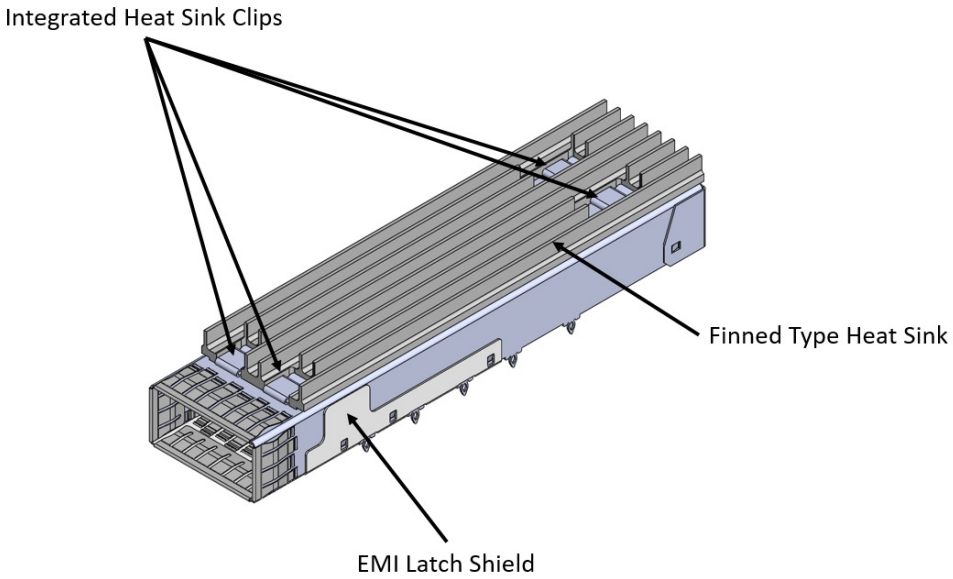

Updates to SFF-8661: QSFP Module

- Add Type 2 module types to support ‘longer’ and higher power modules

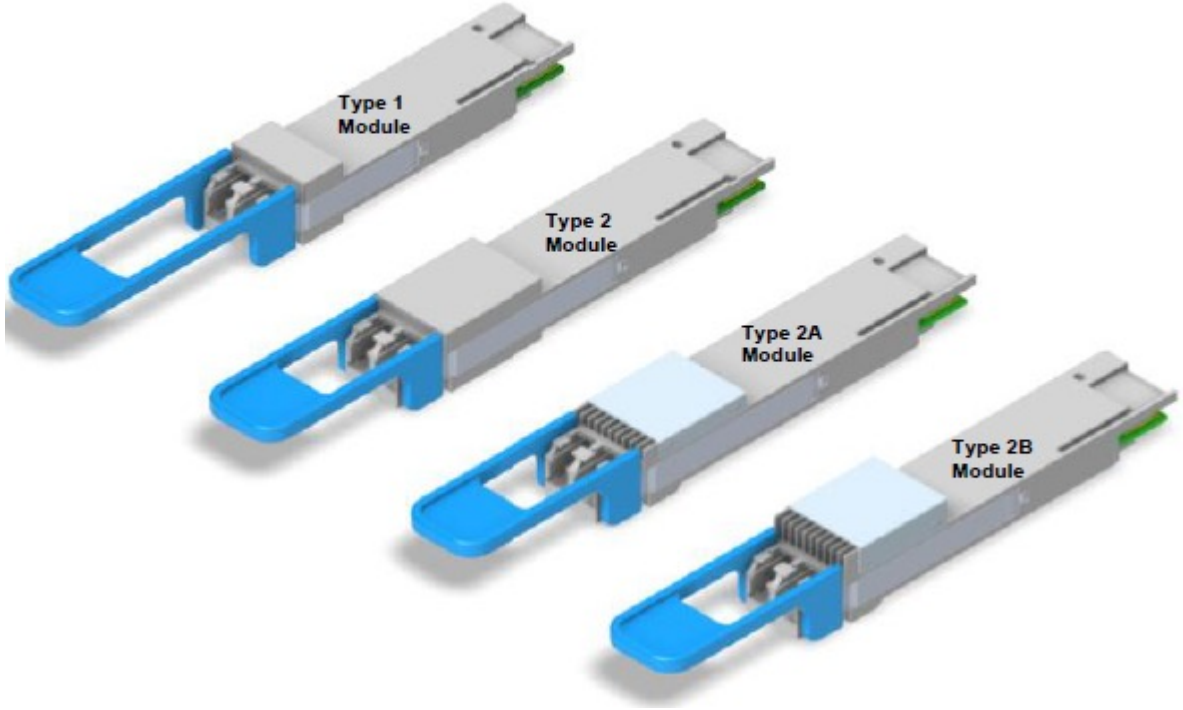

SFF-TA-1027: Next Generation QSFP

Presented by Alex Haser

SFF-TA-1027: Next Generation QSFP

- SFF-TA-1027 (Title TBD) defines QSFP modules, connectors, and cages to support 112G+ applications
  - Technical work based on work done by the QSFP-DD MSA
  - Speed-independent mechanical document to be utilized for future generations
- Management Interface dictated by CMIS (managed by OIF)
- Editors:
  - Paul Coddington, Amphenol
  - Alex Haser, Molex
  - Michael Scholeno, Amphenol

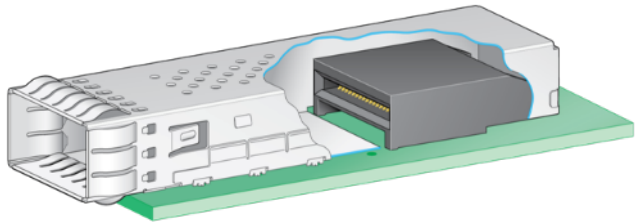

1x1 variant

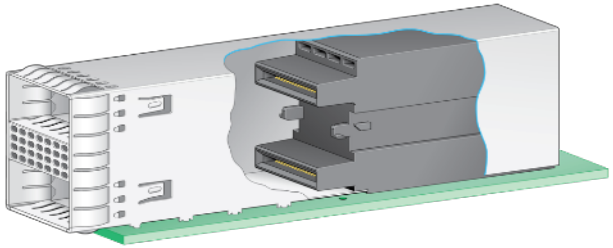

2x1 (stacked) variant

SFF-TA-1027: Next Generation QSFP Details

- Modules: Type 1, Type 2, Type 2A, and Type 2B (thermally enhanced)
  - Updated paddle card definitions including pad width and length
  - Surface roughness and flatness definitions, label locations
- Connectors & cages: 1x1 and 2x1 variations with normative footprints
  - 1x1 footprints include two layout options, one of which is to be used with a QSFP28 Style A cage
  - 2x1 footprints include two different connector host layout implementations

Final Thoughts

Presented by John Geldman

Become a Member of SFF Today!

- Why become a member of SFF?
  - Direct participation in the development of SFF specifications, information documents, and reference guides
  - Ability to open new projects
  - Access to all presentations, drafts, and supplemental material relevant to all SFF projects
  - One of the lowest membership fees around ($1500/ year)
- For more information, click here or email questions to membership@snia.org

Please take a moment to rate this session.

Your feedback is important to us.

